The Izze-Racing infrared sensor is specifically designed to measure the highly transient surface temperature of a tire with spatial fidelity, providing invaluable information for chassis tuning, tire exploitation, and driver development.

The sensor is capable of measuring temperature at 6 or 3 equally-spaced pixels, at a sampling frequency of up to 32Hz, object temperature between -20 to 300˚C, using CAN 2.0A protocol, enclosed in a compact IP66 rated aluminum enclosure, and priced to be affordable to all tiers of motorsport.

This version of the sensor is specifically designed for MoTeC hundred series ECU's (M400, M600, M800, M880).

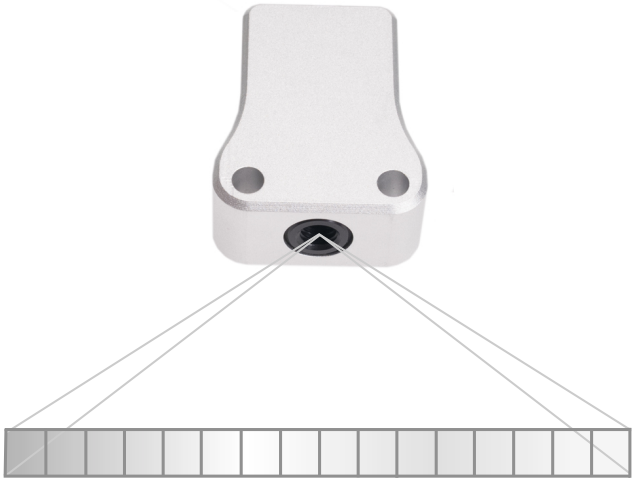

SENSOR SPECIFICATIONS

Temperature Measurement Range, T_o	-20 to 300˚C
Package Temperature Range, T_p	-20 to 85˚C
Accuracy	±1.0˚C for 0˚C < T_p < 50˚C ±2.0˚C for T_p < 0˚C and T_p > 50˚C
Uniformity	±1.0˚C for -20˚C < T_p < 85˚C
Noise Equivalent Temperature Difference, NETD	0.5˚C at 16Hz
Field of View, FOV	60˚x 8˚
Number of Channels	6 or 3
Sampling Frequency	32, 16, 8, 4, 2, or 1Hz (default = 16Hz)
Emissivity	0.01 to 1.00 (default = 0.85)
Spectral Range	8 to 14 µm

ELECTRICAL SPECIFICATIONS

Supply Voltage, V_s	5 to 8 V
Supply Current, I_s (typ)	30 mA
Features	• Reverse polarity protection • Over-temperature protection (125˚C)

MECHANICAL SPECIFICATIONS

Weight	30 g
L x W x H (max)	36.5 x 30 x 15 mm
Protection Rating	IP66

© Izze-Racing 2016

CAN SPECIFICATIONS

Standard	CAN 2.0A (11-bit identifier), ISO-11898
Bit Rate	1 Mbit/s
Byte Order	Big-Endian / Motorola
Data Conversion	0.1˚C per bit, -100˚C offset, unsigned
Base CAN ID's (Default)	1200 (Dec) / 0x4B0 (Hex)
CAN Message Type	MoTeC 16-Bit Compound
Termination	None

CAN ID: 1200 / 0x4B0

Index Value = 0		Channel 1 (ADL 1)		Channel 2 (ADL 2)		Channel 3 (ADL 3)	
Byte 0 (MSB)	Byte 1 (LSB)	Byte 2 (MSB)	Byte 3 (LSB)	Byte 4 (MSB)	Byte 5 (LSB)	Byte 6 (MSB)	Byte 7 (LSB)

CAN ID: 1200 / 0x4B0

Index Value = 1		Channel 4 (ADL 4)		Channel 5 (ADL 5)		Channel 6 (ADL 6)	
Byte 0 (MSB)	Byte 1 (LSB)	Byte 2 (MSB)	Byte 3 (LSB)	Byte 4 (MSB)	Byte 5 (LSB)	Byte 6 (MSB)	Byte 7 (LSB)

CAN ID: 1200 / 0x4B0

Index Value = 2		Channel 7 (ADL 7)		Channel 8 (ADL 8)		Channel 9 (ADL 9)	
Byte 0 (MSB)	Byte 1 (LSB)	Byte 2 (MSB)	Byte 3 (LSB)	Byte 4 (MSB)	Byte 5 (LSB)	Byte 6 (MSB)	Byte 7 (LSB)

CAN ID: 1200 / 0x4B0

Index Value = 3		Channel 10 (ADL 10)		Channel 11 (ADL 11)		Channel 12 (ADL 12)	
Byte 0 (MSB)	Byte 1 (LSB)	Byte 2 (MSB)	Byte 3 (LSB)	Byte 4 (MSB)	Byte 5 (LSB)	Byte 6 (MSB)	Byte 7 (LSB)

WIRING SPECIFICATIONS:

Wire	26 AWG M22759/32, DR25 jacket
Cable Length (typ.)	500 mm
Connector	None

Supply Voltage, V_s	Red	(twisted)
Ground	Black	
CAN +	Blue	(twisted)
CAN -	White	

© Izze-Racing 2016

SENSOR CONFIGURATION:

To modify the sensor's configuration, send the following CAN message at 1Hz for at least 10 seconds and then reset the sensor by disconnecting power for 10 seconds:

CAN ID: Current Base ID

Programming Constant		New CAN Base ID (11-bit)		Emissivity	Frequency	Channels	
Byte 0 (MSB)	Byte 1 (LSB)	Byte 2 (MSB)	Byte 3 (LSB)	Byte 4	Byte 5	Byte 6	Byte 7
30000 = 0x7530		1 = 0x001 ⋮ 2047 = 0x7FF		1 = 0.01 ⋮ 100 = 1.00	1 = 1Hz 2 = 2Hz 3 = 4Hz 4 = 8Hz 5 = 16Hz 6 = 32Hz	30 = 3Ch (Index Value = 0) 31 = 3Ch (Index Value = 1) 32 = 3Ch (Index Value = 2) 33 = 3Ch (Index Value = 3) 60 = 6Ch (Index Value = 0) 61 = 6Ch (Index Value = 1)	

CAN messages should only be sent to the sensor during the configuration sequence. **DO NOT continuously send CAN messages to the sensor.**

DIMENSIONS:

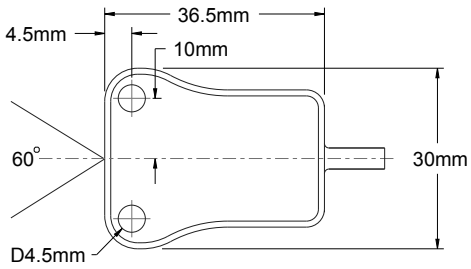

© Izze-Racing 2016

Field of View (FOV):

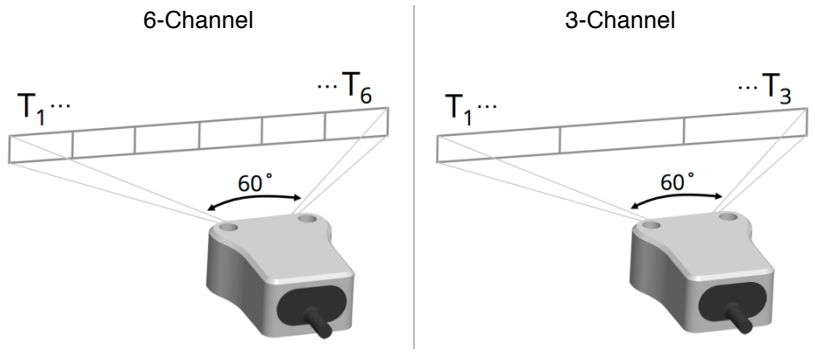

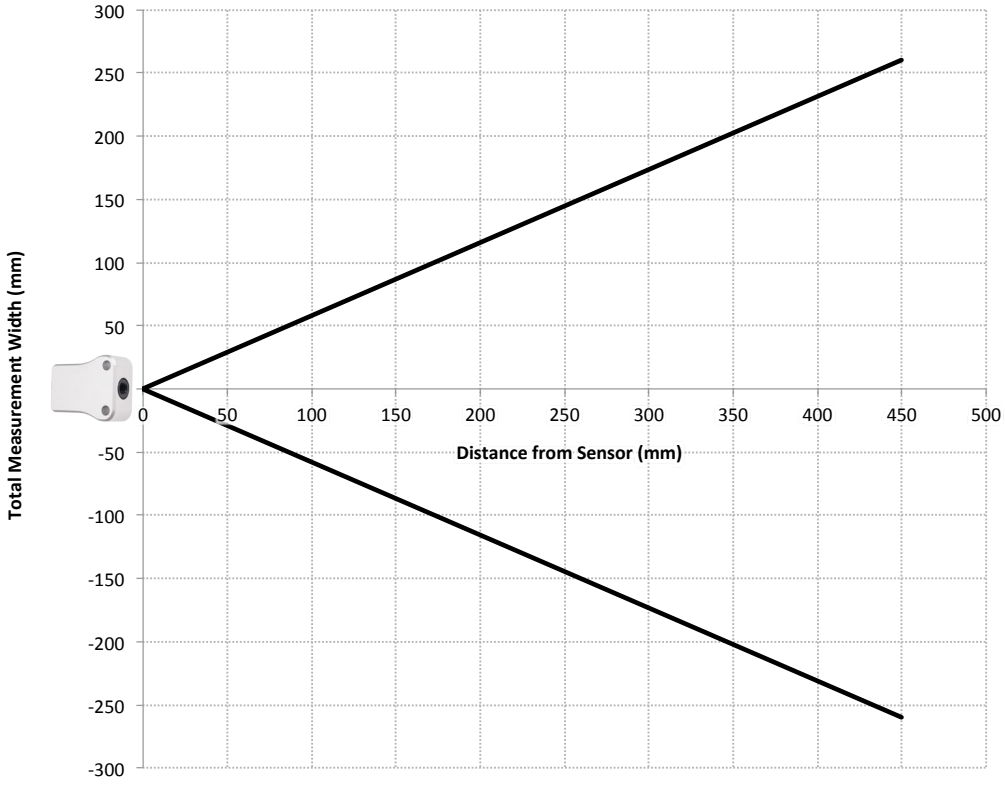

© Izze-Racing 2016

SOFTWARE SETUP FOR MoTeC HUNDRED SERIES ECU's:

1. Open MoTeC ECU Manager and your ECU configuration.
2. Go to Adjust > General Setup > Communications > CAN Setup
3. For CAN 1/2/3/4/5/6 Data, enter 4 for ADL Receive and for CAN 1/2/3/4/5/6 Address enter 1200 (default CAN ID for IR sensors).

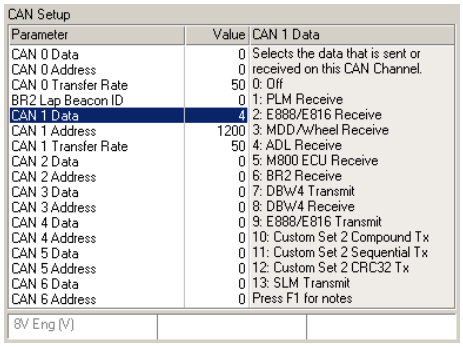

4. Go to Adjust > Sensor Setup > Input Setup..., select the User tab, select User Channel 1 and click Change... Name the temperature channel (e.g., LF T1). Under Input Source select ADL 1 for temperature channel 1 (ADL 2 = temperature channel 2, ADL 3 = temperature channel 3, etc.). Under Calibration, select Custom "Degrees C no decimal place" and then click Table... Enter an Input of 0 and 5000 and temperature (˚C) of -100 and 400 for columns 1 and 2, respectively.

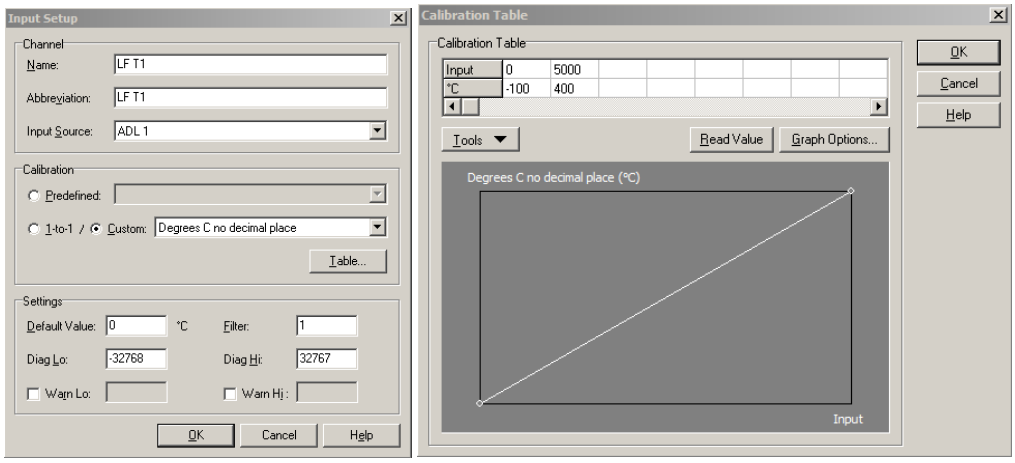

5. Only 8 temperature channels can be configured under the User tab; the EGT channels can be used if more temperature channels are needed.
6. Repeat steps 4 & 5 for all infrared temperature channels.

© Izze-Racing 2016

ADDITIONAL INFORMATION:

- Hundred Series ECU's can only receive up to 12 temperature channels from the sensors. For a setup with two sensors (e.g., drag applications), each sensor can be configured to output 3 or 6 channels. For a setup with four sensors (e.g., circuit applications), each sensor can only be configured to output 3 channels.

- Stated accuracy is under isothermal package conditions, for utmost accuracy, avoid abrupt temperature transients and gradients across the sensor's package.

- Point the sensor in the downstream direction (facing front of tire) to avoid contamination, pitting, and/or destruction of the sensor's lens from debris.

- The emissivity of most tires ranges from approximately 0.85 to 0.90 in the 8 to 14 µm spectrum.

- Noise Equivalent Temperature Difference (NETD) increases with increasing sampling frequency:

    - Provided that tire surface temperature is highly transient, it is usually advantageous to use a higher sampling frequency at the cost of increased noise.

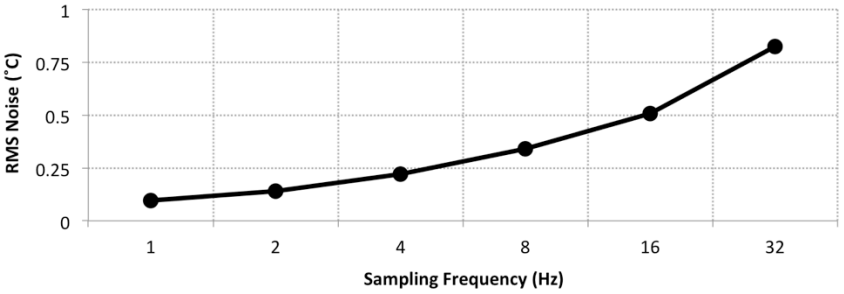

WARRANTY:

All sensors come with a 30-day return policy and have a 1-year warranty from manufacturing defects. If there is ever an issue, please contact us at support@izzeracing.com

© Izze-Racing 2016